# SPECIFICATION OF BSFxxxxMCPGM SERIES

## FEATURES

1.Metal material for large current and low loss.

2.High performance (Isat) realized by metal dust core.

3.Low loss realized with low Rdc.

4.Closed magnetic circuit design reduces leakage flux.

5.Vinyl thermal spray, better surface compactness.

6. RoHS compliant.

## APPLICATIONS

DC/DC Converters .

Pad,Smartphone.

Portable gaming devices, Smart wear, Wi-Fi module.

Notebooks, VR, AR.

LCD displays, HDDs, DVCs, DSCs, etc.

## ORDERING CODE

BSF2512MCPGM 1R0 M T

(1) (2) (3)(4)

(1) PRODUCT TYPE CODE AND SIZE CODE

(2) INDUCTANCE

(3) INDUCTANCE TOLERANCE ( M : ±20%, N : ±30% )

(4) REEL TAPING

Unit: mm

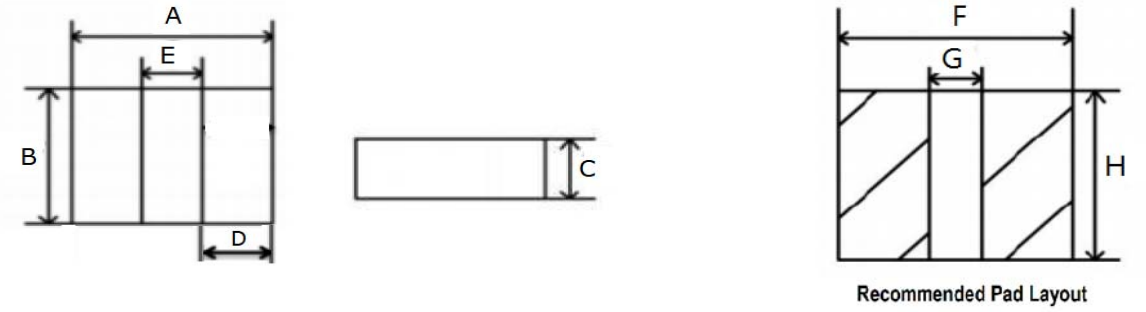


## SHAPE & DIMENSIONS

| SIZE CODE | A mm | B mm | C mm | D mm | E mm | F mm | G mm | H mm | | |
|---|---|---|---|---|---|---|---|---|---|---|
| BSF1006MCPGM | 1.0±0.1 | 0.7±0.1 | 0.65max | 0.3±0.2 | 0.4±0.2 | 1.1 | 0.3 | 0.8 | | |
| BSF1206MCPGM | 1.2±0.2 | 1.0±0.2 | 0.65max | 0.4±0.2 | 0.4±0.2 | 1.3 | 0.3 | 1.1 | | |
| BSF1608MCPGM | 1.6±0.2 | 0.8±0.2 | 0.80max | 0.5±0.2 | 0.6±0.2 | 1.7 | 0.5 | 0.9 | | |
| BSF1408MCPGM | 1.4±0.2 | 1.2±0.2 | 0.80max | 0.45±0.2 | 0.5±0.2 | 1.5 | 0.4 | 1.3 | | |
| BSF201210MCPGM | 2.0±0.2 | 1.2±0.2 | 1.0max | 0.7±0.2 | 0.6±0.2 | 2.1 | 0.5 | 1.3 | | |
| BSF201610MCPGM | 2.0±0.2 | 1.6±0.2 | 1.0max | 0.7±0.2 | 0.6±0.2 | 2.1 | 0.5 | 1.7 | | |

※All the data listed in this catalogue are for reference only, King Core reserves the right to alter or revise the specifications without prior notification.

KING CORE ELECTRONICS INC. No.269,Nanfong Rd.,Pingjhen City,Taoyuan County, Taiwan
Tel:886-3-4698855 Fax:886-3-4691395 E-mail:kc@mail.kingcore.com.tw Web Site:http://www.kingcore.com.tw

# SPECIFICATION OF BSFxxxxMCPGM SERIES

## FEATURES

1.Metal material for large current and low loss.

2.High performance (Isat) realized by metal dust core.

3.Low loss realized with low Rdc.

4.Closed magnetic circuit design reduces leakage flux.

5.Vinyl thermal spray, better surface compactness.

6. RoHS compliant.

## APPLICATIONS

DC/DC Converters .

Pad,Smartphone.

Portable gaming devices, Smart wear, Wi-Fi module.

Notebooks, VR, AR.

LCD displays, HDDs, DVCs, DSCs, etc.

## ORDERING CODE

BSF2512MCPGM 1R0 M T

(1) (2) (3)(4)

(1) PRODUCT TYPE CODE AND SIZE CODE

(2) INDUCTANCE

(3) INDUCTANCE TOLERANCE ( M : ±20%, N : ±30% )

(4) REEL TAPING

Unit: mm

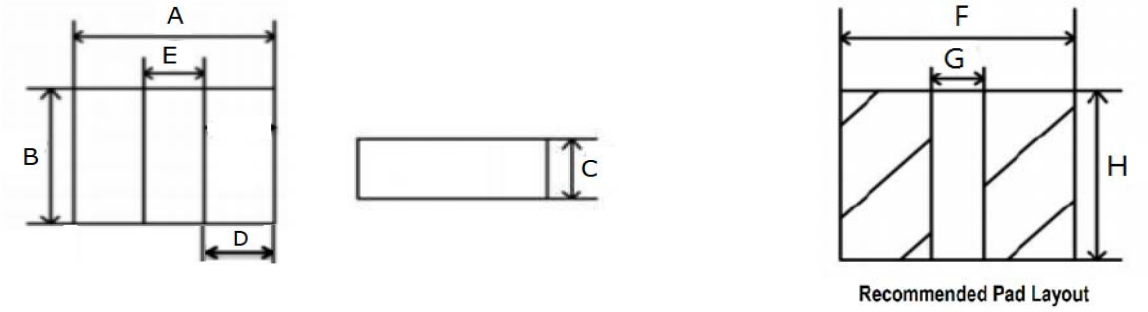


## SHAPE & DIMENSIONS

| SIZE CODE | A mm | B mm | C mm | D mm | E mm | F mm | G mm | H mm | | |
|---|---|---|---|---|---|---|---|---|---|---|
| BSF2510MCPGM | 2.5±0.2 | 2.0±0.2 | 1.0max | 0.85±0.20 | 0.8±0.2 | 2.6 | 0.7 | 2.1 | | |
| BSF2512MCPGM | 2.5±0.2 | 2.0±0.2 | 1.2max | 0.85±0.20 | 0.8±0.2 | 2.6 | 0.7 | 2.1 | | |
| BSF3212MCPGM | 3.2±0.2 | 2.5±0.2 | 1.2max | 1.05±0.20 | 1.0±0.2 | 3.2 | 0.9 | 2.5 | | |
| BSF4012MCPGM | 4.1±0.2 | 4.1±0.2 | 1.2max | 1.4±0.2 | 1.3±0.2 | 4.1 | 1.1 | 4.1 | | |

※All the data listed in this catalogue are for reference only, King Core reserves the right to alter or revise the specifications without prior notification.

KING CORE ELECTRONICS INC. No.269,Nanfong Rd.,Pingjhen City,Taoyuan County, Taiwan
Tel:886-3-4698855 Fax:886-3-4691395 E-mail:kc@mail.kingcore.com.tw Web Site:http://www.kingcore.com.tw

# SMD POWER INDUCTORS → BSF1006MCPGM SERIES

## ELECTRICAL CHARACTERISTIC

| ORDERING CODE | Inductance (μH) | DC Resistance (mΩ)max | Isat (A)max | IDC (A)max |
|---|---|---|---|---|
| BSF1006MCPGM1R5MT | 1.5 | 500.0 | 0.9 | 0.3 |
| BSF1006MCPGH2R6MT | 2.6 | 900.0 | 0.8 | 0.4 |

※Test Frequency：1MHz/1V

※Isat: Based on Inductance decrease 30%

※IDC: Based on Temperature increase 40°C

※Operating temperature range：–40°C ~ +125°C (including self-heating)

※All the data listed in this catalogue are for reference only, King Core reserves the right to alter or revise the specifications without prior notification.

KING CORE ELECTRONICS INC. No.269,Nanfong Rd.,Pingjhen City,Taoyuan County, Taiwan
Tel:886-3-4698855 Fax:886-3-4691395 E-mail:kc@mail.kingcore.com.tw Web Site:http://www.kingcore.com.tw

# SMD POWER INDUCTORS → BSF1206MCPGM SERIES

## ELECTRICAL CHARACTERISTIC

| ORDERING CODE | Inductance (μH) | DC Resistance (mΩ)max | Isat (A)max | IDC (A)max |
|---|---|---|---|---|
| BSF1206MCPGM2R2MT | 2.2 | 340.0 | 1.2 | 0.9 |

※Test Frequency：1MHz/1V

※Isat: Based on Inductance decrease 30%

※IDC: Based on Temperature increase 40°C

※Operating temperature range：–40°C ~ +125°C (including self-heating)

※All the data listed in this catalogue are for reference only, King Core reserves the right to alter or revise the specifications without prior notification.

KING CORE ELECTRONICS INC. No.269,Nanfong Rd.,Pingjhen City,Taoyuan County, Taiwan
Tel:886-3-4698855 Fax:886-3-4691395 E-mail:kc@mail.kingcore.com.tw Web Site:http://www.kingcore.com.tw

# SMD POWER INDUCTORS → BSF1608MCPGM SERIES

## ELECTRICAL CHARACTERISTIC

| ORDERING CODE | Inductance (μH) | DC Resistance (mΩ)max | Isat (A)max | IDC (A)max |
|---|---|---|---|---|
| BSF1608MCPGMR22MT | 0.22 | 40.0 | 5.0 | 3.0 |
| BSF1608MCPGMR24MT | 0.24 | 41.0 | 4.8 | 2.9 |
| BSF1608MCPGMR47MT | 0.47 | 100.0 | 3.7 | 2.3 |
| BSF1608MCPGMR56MT | 0.56 | 110.0 | 3.5 | 1.9 |
| BSF1608MCPGMR68MT | 0.68 | 130.0 | 3.0 | 1.9 |
| BSF1608MCPGM1R0MT | 1.0 | 200.0 | 2.6 | 1.8 |
| BSF1608MCPGM1R5MT | 1.5 | 285.0 | 2.0 | 1.4 |
| BSF1608MCPGM2R2MT | 2.2 | 260.0 | 1.3 | 1.2 |
| BSF1608MCPGM3R3MT | 3.3 | 600.0 | 1.2 | 0.9 |
| BSF1608MCPGM4R7MT | 4.7 | 700.0 | 1.0 | 0.8 |
| BSF1608MCPGM100MT | 10.0 | 1600.0 | 0.7 | 0.45 |

※Test Frequency：1MHz/1V

※Isat: Based on Inductance decrease 30%

※IDC: Based on Temperature increase 40°C

※Operating temperature range：–40°C ~ +125°C (including self-heating)

※All the data listed in this catalogue are for reference only, King Core reserves the right to alter or revise the specifications without prior notification.

KING CORE ELECTRONICS INC. No.269,Nanfong Rd.,Pingjhen City,Taoyuan County, Taiwan
Tel:886-3-4698855 Fax:886-3-4691395 E-mail:kc@mail.kingcore.com.tw Web Site:http://www.kingcore.com.tw

# SMD POWER INDUCTORS → BSF1408MCPGM SERIES

## ELECTRICAL CHARACTERISTIC

| ORDERING CODE | Inductance (μH) | DC Resistance (mΩ)max | Isat (A)max | IDC (A)max |
|---|---|---|---|---|
| BSF1408MCPGMR24MT | 0.24 | 27.0 | 5.7 | 3.7 |
| BSF1408MCPGMR33MT | 0.33 | 28.0 | 5.0 | 3.5 |
| BSF1408MCPGMR47MT | 0.47 | 35.0 | 4.2 | 3.3 |
| BSF1408MCPGM1R0MT | 1.0 | 77.0 | 2.5 | 2.5 |

※Test Frequency：1MHz/1V

※Isat: Based on Inductance decrease 30%

※IDC: Based on Temperature increase 40°C

※Operating temperature range：–40°C ~ +125°C (including self-heating)

※All the data listed in this catalogue are for reference only, King Core reserves the right to alter or revise the specifications without prior notification.

KING CORE ELECTRONICS INC. No.269,Nanfong Rd.,Pingjhen City,Taoyuan County, Taiwan
Tel:886-3-4698855 Fax:886-3-4691395 E-mail:kc@mail.kingcore.com.tw Web Site:http://www.kingcore.com.tw

# SMD POWER INDUCTORS → BSF201210MCPGM SERIES

## ELECTRICAL CHARACTERISTIC

| ORDERING CODE | Inductance (μH) | DC Resistance (mΩ)max | Isat (A)max | IDC (A)max |
|---|---|---|---|---|
| BSF201210MCPGMR10MT | 0.10 | 13.0 | 8.0 | 7.0 |
| BSF201210MCPGMR22MT | 0.22 | 22.0 | 6.8 | 6.5 |
| BSF201210MCPGMR24MT | 0.24 | 23.0 | 6.7 | 6.4 |
| BSF201210MCPGMR33MT | 0.33 | 32.0 | 6.0 | 5.0 |
| BSF201210MCPGMR47MT | 0.47 | 36.0 | 5.0 | 4.3 |
| BSF201210MCPGMR68MT | 0.68 | 43.0 | 4.5 | 4.0 |
| BSF201210MCPGM1R0MT | 1.0 | 63.0 | 3.5 | 3.5 |
| BSF201210MCPGM1R5MT | 1.5 | 85.0 | 2.7 | 2.6 |
| BSF201210MCPGM2R2MT | 2.2 | 150.0 | 2.4 | 1.7 |
| BSF201210MCPGM3R3MT | 3.3 | 260.0 | 1.8 | 1.5 |
| BSF201210MCPGM4R7MT | 4.7 | 300.0 | 1.6 | 1.4 |
| BSF201210MCPGM6R8MT | 6.8 | 520.0 | 1.2 | 1.3 |
| BSF201210MCPGM100MT | 10.0 | 660.0 | 1.0 | 1.0 |

※Test Frequency：1MHz/1V

※Isat: Based on Inductance decrease 30%

※IDC: Based on Temperature increase 40°C

※Operating temperature range：–40°C ~ +125°C (including self-heating)

※All the data listed in this catalogue are for reference only, King Core reserves the right to alter or revise the specifications without prior notification.

KING CORE ELECTRONICS INC. No.269,Nanfong Rd.,Pingjhen City,Taoyuan County, Taiwan
Tel:886-3-4698855 Fax:886-3-4691395 E-mail:kc@mail.kingcore.com.tw Web Site:http://www.kingcore.com.tw

# SMD POWER INDUCTORS → BSF201610MCPGM SERIES

## ELECTRICAL CHARACTERISTIC

| ORDERING CODE | Inductance (μH) | DC Resistance (mΩ)max | Isat (A)max | IDC (A)max |
|---|---|---|---|---|
| BSF201610MCPGMR10MT | 0.10 | 12.0 | 8.4 | 8.0 |
| BSF201610MCPGMR11MT | 0.11 | 13.0 | 8.2 | 7.5 |
| BSF201610MCPGMR15MT | 0.15 | 14.0 | 8.0 | 7.0 |
| BSF201610MCPGMR22MT | 0.22 | 18.0 | 7.5 | 6.3 |
| BSF201610MCPGMR24MT | 0.24 | 19.0 | 7.4 | 6.2 |
| BSF201610MCPGMR33MT | 0.33 | 22.0 | 6.5 | 5.3 |
| BSF201610MCPGMR47MT | 0.47 | 25.0 | 5.5 | 5.0 |
| BSF201610MCPGMR68MT | 0.68 | 32.0 | 4.7 | 4.3 |
| BSF201610MCPGM1R0MT | 1.0 | 43.0 | 4.2 | 4.1 |
| BSF201610MCPGM1R5MT | 1.5 | 100.0 | 2.9 | 2.3 |
| BSF201610MCPGM2R2MT | 2.2 | 130.0 | 2.8 | 2.1 |
| BSF201610MCPGM3R3MT | 3.3 | 170.0 | 2.0 | 1.5 |
| BSF201610MCPGM4R7MT | 4.7 | 220.0 | 1.8 | 1.4 |
| BSF201610MCPGM100MT | 10.0 | 580.0 | 1.1 | 0.7 |

※Test Frequency：1MHz/1V

※Isat: Based on Inductance decrease 30%

※IDC: Based on Temperature increase 40°C

※Operating temperature range：–40°C ~ +125°C (including self-heating)

※All the data listed in this catalogue are for reference only, King Core reserves the right to alter or revise the specifications without prior notification.

KING CORE ELECTRONICS INC. No.269,Nanfong Rd.,Pingjhen City,Taoyuan County, Taiwan
Tel:886-3-4698855 Fax:886-3-4691395 E-mail:kc@mail.kingcore.com.tw Web Site:http://www.kingcore.com.tw

# SMD POWER INDUCTORS → BSF2510MCPGM SERIES

## ELECTRICAL CHARACTERISTIC

| ORDERING CODE | Inductance (μH) | DC Resistance (mΩ)max | Isat (A)max | IDC (A)max |
|---|---|---|---|---|
| BSF2510MCPGMR22MT | 0.22 | 17.0 | 7.9 | 6.5 |
| BSF2510MCPGMR24MT | 0.24 | 17.5 | 7.8 | 6.4 |
| BSF2510MCPGMR33MT | 0.33 | 19.0 | 7.2 | 6.2 |
| BSF2510MCPGMR47MT | 0.47 | 22.0 | 6.5 | 5.6 |
| BSF2510MCPGMR68MT | 0.68 | 27.0 | 5.5 | 5.0 |
| BSF2510MCPGM1R0MT | 1.0 | 30.0 | 4.8 | 4.1 |
| BSF2510MCPGM1R5MT | 1.5 | 55.0 | 3.9 | 3.0 |
| BSF2510MCPGM2R2MT | 2.2 | 70.0 | 3.0 | 2.1 |
| BSF2510MCPGM3R3MT | 3.3 | 100.0 | 2.5 | 2.1 |
| BSF2510MCPGM4R7MT | 4.7 | 180.0 | 2.0 | 1.6 |
| BSF2510MCPGM6R8MT | 6.8 | 320.0 | 1.9 | 1.4 |
| BSF2510MCPGM100MT | 10.0 | 560.0 | 1.4 | 0.95 |

※Test Frequency：1MHz/1V

※Isat: Based on Inductance decrease 30%

※IDC: Based on Temperature increase 40°C

※Operating temperature range：–40°C ~ +125°C (including self-heating)

※All the data listed in this catalogue are for reference only, King Core reserves the right to alter or revise the specifications without prior notification.

KING CORE ELECTRONICS INC. No.269,Nanfong Rd.,Pingjhen City,Taoyuan County, Taiwan
Tel:886-3-4698855 Fax:886-3-4691395 E-mail:kc@mail.kingcore.com.tw Web Site:http://www.kingcore.com.tw

# SMD POWER INDUCTORS → BSF2512MCPGM SERIES

## ELECTRICAL CHARACTERISTIC

| ORDERING CODE | Inductance (μH) | DC Resistance (mΩ)max | Isat (A)max | IDC (A)max |
|---|---|---|---|---|
| BSF2512MCPGMR10MT | 0.10 | 10.0 | 12.5 | 10.5 |
| BSF2512MCPGMR15MT | 0.15 | 11.0 | 12.0 | 10.0 |
| BSF2512MCPGMR22MT | 0.22 | 14.0 | 9.0 | 7.6 |
| BSF2512MCPGMR24MT | 0.24 | 15.0 | 8.8 | 7.5 |
| BSF2512MCPGMR33MT | 0.33 | 17.0 | 7.8 | 6.4 |
| BSF2512MCPGMR47MT | 0.47 | 19.0 | 7.0 | 6.0 |
| BSF2512MCPGMR47MT01 | 0.47 | 13.0 | 8.0 | 7.5 |
| BSF2512MCPGMR68MT | 0.68 | 23.0 | 6.0 | 5.5 |
| BSF2512MCPGMR68MT01 | 0.68 | 18.0 | 6.0 | 7.0 |
| BSF2512MCPGMR82MT | 0.82 | 24.0 | 5.8 | 5.3 |
| BSF2512MCPGM1R0MT | 1.0 | 42.0 | 5.0 | 3.6 |
| BSF2512MCPGM1R0MT01 | 1.0 | 22.0 | 6.0 | 4.5 |
| BSF2512MCPGM1R0MT02 | 1.0 | 36.0 | 5.0 | 5.0 |
| BSF2512MCPGM1R2MT | 1.2 | 45.0 | 4.1 | 3.4 |
| BSF2512MCPGM1R5MT | 1.5 | 50.0 | 4.1 | 3.2 |
| BSF2512MCPGM1R5MT01 | 1.5 | 32.0 | 4.4 | 4.2 |
| BSF2512MCPGM1R5MT02 | 1.5 | 50.0 | 4.1 | 3.2 |
| BSF2512MCPGM2R2MT | 2.2 | 65.0 | 3.3 | 2.7 |
| BSF2512MCPGM3R3MT | 3.3 | 97.0 | 2.7 | 1.8 |
| BSF2512MCPGM4R7MT | 4.7 | 170.0 | 2.1 | 1.5 |
| BSF2512MCPGM6R8MT | 6.8 | 270.0 | 1.7 | 1.4 |
| BSF2512MCPGM100MT | 10.0 | 400.0 | 1.45 | 1.05 |

※Test Frequency：1MHz/1V

※Isat: Based on Inductance decrease 30%

※IDC: Based on Temperature increase 40°C

※Operating temperature range：–40°C ~ +125°C (including self-heating)

※All the data listed in this catalogue are for reference only, King Core reserves the right to alter or revise the specifications without prior notification.

KING CORE ELECTRONICS INC. No.269,Nanfong Rd.,Pingjhen City,Taoyuan County, Taiwan
Tel:886-3-4698855 Fax:886-3-4691395 E-mail:kc@mail.kingcore.com.tw Web Site:http://www.kingcore.com.tw

# SMD POWER INDUCTORS → BSF3212MCPGM SERIES

## ELECTRICAL CHARACTERISTIC

| ORDERING CODE | Inductance (μH) | DC Resistance (mΩ)max | Isat (A)max | IDC (A)max |
|---|---|---|---|---|
| BSF3212MCPGMR10MT | 0.10 | 7.0 | 16.5 | 11.0 |
| BSF3212MCPGMR22MT | 0.22 | 10.0 | 11.0 | 8.7 |
| BSF3212MCPGMR24MT | 0.24 | 12.0 | 10.5 | 8.5 |
| BSF3212MCPGMR33MT | 0.33 | 14.0 | 9.5 | 8.1 |
| BSF3212MCPGMR47MT | 0.47 | 19.0 | 8.2 | 7.2 |
| BSF3212MCPGMR68MT | 0.68 | 23.0 | 7.7 | 6.8 |
| BSF3212MCPGM1R0MT | 1.0 | 30.0 | 5.8 | 4.8 |
| BSF3212MCPGM1R5MT | 1.5 | 44.0 | 4.7 | 4.3 |
| BSF3212MCPGM2R2MT | 2.2 | 70.0 | 4.2 | 3.0 |
| BSF3212MCPGM3R3MT | 3.3 | 95.0 | 3.2 | 2.5 |
| BSF3212MCPGM4R7MT | 4.7 | 135.0 | 2.6 | 2.0 |
| BSF3212MCPGM6R8MT | 6.8 | 210.0 | 2.4 | 1.90 |
| BSF3212MCPGM100MT | 10.0 | 230.0 | 1.9 | 1.8 |

※Test Frequency：1MHz/1V

※Isat: Based on Inductance decrease 30%

※IDC: Based on Temperature increase 40°C

※Operating temperature range：–40°C ~ +125°C (including self-heating)

※All the data listed in this catalogue are for reference only, King Core reserves the right to alter or revise the specifications without prior notification.

KING CORE ELECTRONICS INC. No.269,Nanfong Rd.,Pingjhen City,Taoyuan County, Taiwan
Tel:886-3-4698855 Fax:886-3-4691395 E-mail:kc@mail.kingcore.com.tw Web Site:http://www.kingcore.com.tw

# SMD POWER INDUCTORS → BSF4012MCPGM SERIES

## ELECTRICAL CHARACTERISTIC

| ORDERING CODE | Inductance (μH) | DC Resistance (mΩ)max | Isat (A)max | IDC (A)max |
|---|---|---|---|---|
| BSF4012MCPGMR47MT | 0.47 | 14.0 | 11.5 | 8.5 |
| BSF4012MCPGMR68MT | 0.68 | 18.0 | 9.0 | 7.5 |
| BSF4012MCPGM1R0MT | 1.0 | 25.0 | 10.0 | 5.5 |
| BSF4012MCPGM1R5MT | 1.5 | 34.5 | 7.0 | 5.0 |
| BSF4012MCPGM2R2MT | 2.2 | 55.0 | 6.0 | 4.5 |
| BSF4012MCPGM3R3MT | 3.3 | 80.0 | 5.0 | 4.0 |
| BSF4012MCPGM4R7MT | 4.7 | 110.0 | 4.5 | 3.0 |
| BSF4012MCPGM5R6MT | 5.6 | 140.0 | 4.0 | 2.5 |
| BSF4012MCPGM6R8MT | 6.8 | 160.0 | 3.5 | 2.3 |
| BSF4012MCPGM100MT | 10.0 | 235.0 | 2.5 | 2.0 |

※Test Frequency：1MHz/1V

※Isat: Based on Inductance decrease 30%

※IDC: Based on Temperature increase 40°C

※Operating temperature range：–40°C ~ +125°C (including self-heating)

※All the data listed in this catalogue are for reference only, King Core reserves the right to alter or revise the specifications without prior notification.

KING CORE ELECTRONICS INC. No.269,Nanfong Rd.,Pingjhen City,Taoyuan County, Taiwan
Tel:886-3-4698855 Fax:886-3-4691395 E-mail:kc@mail.kingcore.com.tw Web Site:http://www.kingcore.com.tw